Teileliste				
Element	Anz.	Bauteilnummer	Beschreibung	Material
1	2	Rahmen vorn oben	600x54x54; 14612119	Kiefer
2	2	Rahmen seite oben	564x54x54; 14612119	Kiefer
3	12	Spax 6x70 0191010600703	B00MPIBYAU	Stahl

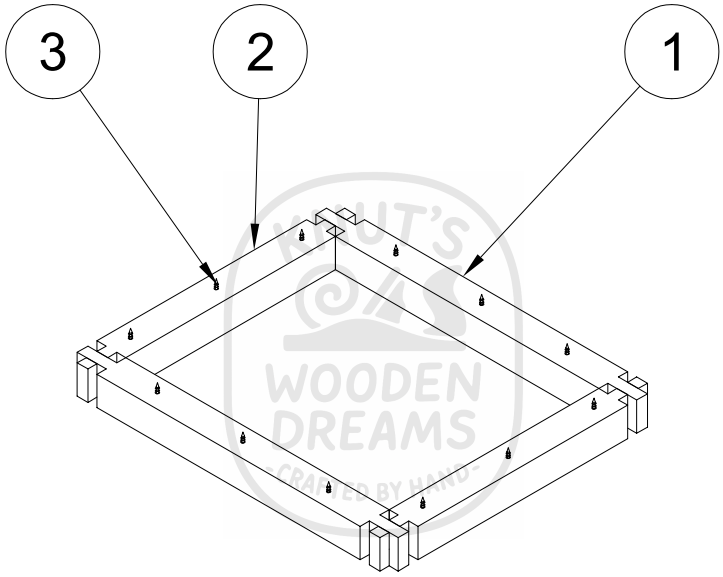

KNUT'S WOODEN DREAMS CRAFTED BY HAND

Dept.	Technical reference	Created by	Approved by
		Knut Welzel 17.01.2024	
		Document type	Document status
		Title: Standardtisch Rahmen oben	DWG No.
			Rev. / Date of issue / Sheet 6